MX10FIT465-xx

NWAV™ X-Pol Ten-Port Antenna

X-Pol Ten-Port 4 ft, 65° Form in Tighter with Smart Bias Ts, 698-4200 MHz:

2 ports 698-894 MHz, 4 ports 1695-2200 MHz, and 4 ports 3400-4200 MHz

- Excellent passive intermodulation (PIM) performance reduces harmful interference.
- Fully integrated (iRETs) with independent RET control for low band and mid band
- FET configured with internal RET for high band & ease of future network optimization.
- SON-Ready array spacing supports beamforming capabilities
- Suitable for 3G, 4G, and 5G interface technologies
- Integrated Smart Bias-Ts reduce leasing costs
- Optimized form factor for reduced wind loading

nWAV™

Electrical specification (minimum/maximum)	Ports 1, 2		Ports 3, 4, 5, 6		
Frequency bands, MHz	698-806	806-894	1695-1880	1850-1990	1920-2200
Polarization	± 45°		± 45°		
Average gain over all tilts, dBi	12.9	13.3	16.3	16.5	16.2
Horizontal beamwidth (HBW), degrees[1]	69.5	68.4	61.0	62.0	62.0
Front-to-back ratio, co-polar power @180°± 30°, dB	>29	>29	>25.0	>25.0	>25.0
X-Pol discrimination (CPR) at boresight, dB	>21	>22	>17	>20	>19
Vertical beamwidth (VBW), degrees[1]	18.5	16.0	8.0	7.4	7.1
Electrical downtilt (EDT) range, degrees	2-16		0-9		
First upper side lobe (USLS) suppression, dB[1]	≤-15	≤-16	≤-15	≤-15	≤-15
Cross-polar isolation, port-to-port, dB[1]	25	25	25	25	25
Max VSWR / return loss, dB	1.5:1 / -14.0		1.5:1 / -14.0		
Max passive intermodulation (PIM), 2x20W carrier, dBc	-153		-153		
Max input power per any port, watts	300		250		
Total composite power all ports (1-10), watts	1500				

[1] Typical value over frequency and tilt

©2024 JMA Wireless. All rights reserved. This document contains proprietary information. All products, company names, brands, and logos are trademarks™ or registered® trademarks of their respective holders. All specifications are subject to change without notice. +1 315.431.7100 customerservice@jmawireless.com

Electrical specification (minimum/maximum)	Ports 7, 8, 9, 10			
Frequency bands, MHz	3400-3550	3550-3700	3700-3950	3950-4200
Polarization	± 45°			
Average gain over all tilts, dBi	13.0	13.0	13.5	13.8
Horizontal beamwidth (HBW), degrees	66	60	55	56
Front-to-back ratio, co-polar power @180°± 30°, dB	>25	>25	>25	>25
Vertical beamwidth (VBW), degrees[1]	20.0	20.0	19.0	20.0
Electrical downtilt (EDT) range, degrees	2-12 orderable in 1 deg increments			
First upper side lobe (USLS) suppression, dB[1]	≤-15	≤-15	≤-15	≤-13
Cross-polar isolation, port-to-port, dB[1]	25	25	25	25
Max VSWR / return loss, dB	1.5:1 / -14.0			
Max input power per any port, watts	150			
Total composite power all ports (1-10), watts	1500			

[1] Typical value over frequency and tilt

* For ports 7-10, the electrical downtilt is FET configured with internal RET, where the required electrical downtilt is defined at the time of order per the ordering information below.

Ordering information	
Antenna model	**Description**
MX10FIT465-xx (xx represents the FET in one degree increments for 3.4-4.2GHz)	4F X- Pol 10 Port FIT 65º 2-16º/ 0-9º/ 2-12º, 4.3-10 & SBTs
	xx=02 thru 12 for each 1 degree tilt 3.4-4.2GHz Examples MX10FIT465-02 – 2deg, MX10FIT465-09 – 9deg, MX10FIT465-12-12deg
Optional accessories	
AISG cables	M/F cables for AISG connections
PCU-1000 RET controller	Stand-alone controller for RET control and configurations
91900314-02	Dual Mount Bracket (see 91900314 bracket document for details)

©2024 JMA Wireless. All rights reserved. This document contains proprietary information. All products, company names, brands, and logos are trademarks™ or registered® trademarks of their respective holders. All specifications are subject to change without notice. +1 315.431.7100 customerservice@jmawireless.com

MX10FIT465-xx

NWAV™ X-Pol Ten-Port Antenna

Mechanical specifications	
Dimensions height/width/depth, inches (mm)	50.5/ 14.6/ 7.03 (1282.7/ 370.8/ 178.6)
Shipping dimensions length/width/height, inches (mm)	60/ 20/ 12 (1524/ 508/ 305)
No. of RF input ports, connector type, and location	10 x 4.3-10 female, bottom
RF connector torque	96 lbf·in (10.85 N·m or 8 lbf·ft)
Net antenna weight, lb (kg)	41.1 (18.6)
Shipping weight, lb (kg)	76.1 (34.5)
Antenna mounting and downtilt kit included with antenna	91900318
Net weight of the mounting and downtilt kit, lb (kg)	18 (8.18)
Range of mechanical up/down tilt	-2° to 12°
Rated wind survival speed, mph (km/h)	150 (241)
Frontal and lateral wind loading @ 150 km/h, lbf (N)	71 (315.8), 49.2 (218.9)
Equivalent flat plate @ 100 mph and Cd=2, sq ft	1.63
EPA frontal and lateral, ft^2, (m^2)	3.2 (0.30), 2.7 (0.25)

Front view **Back view** **Bottom view**

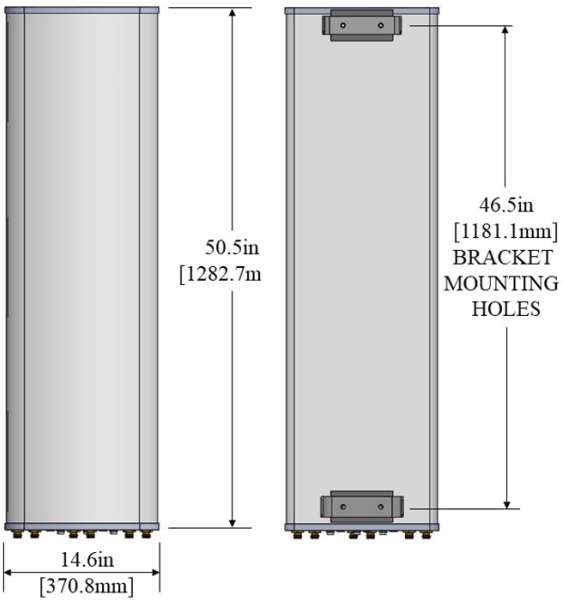

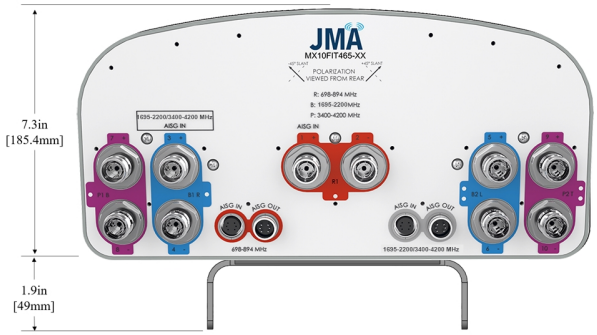

©2024 JMA Wireless. All rights reserved. This document contains proprietary information. All products, company names, brands, and logos are trademarks™ or registered® trademarks of their respective holders. All specifications are subject to change without notice. +1 315.431.7100 customerservice@jmawireless.com

Remote electrical tilt (RET 1000) information	
RET location	Integrated into antenna
RET interface connector type	8-pin AISG connector per IEC 60130-9 or RF port bias-t
RET connector torque	Min 0.5 N·m to max 1.0 N·m (hand pressure & finger tight)
RET interface connector quantity	2 pairs of AISG male/female connectors and 2 RF port bias-ts
RET interface connector location	Bottom of the antenna
Total no. of internal RETs 698-894 MHz	1
Total no. of internal RETs 1695-2180 MHz	1
Total no. of internal RETs 3400-4200 MHz	1
RET input operating voltage, vdc	10-30
RET max power consumption, idle state, W	≤ 2.0
RET max power consumption, normal operating conditions, W	≤ 13.0
RET communication protocol	AISG 2.0 / 3GPP

RET and RF connector topology

Each RET device can be controlled either via the designated external AISG connector or RF smart bias-t port as shown below:

Band	RF port	Band	RF port
3400-4200	7-10	1695-2200	3-6

Band	RF port
698-894	1-2

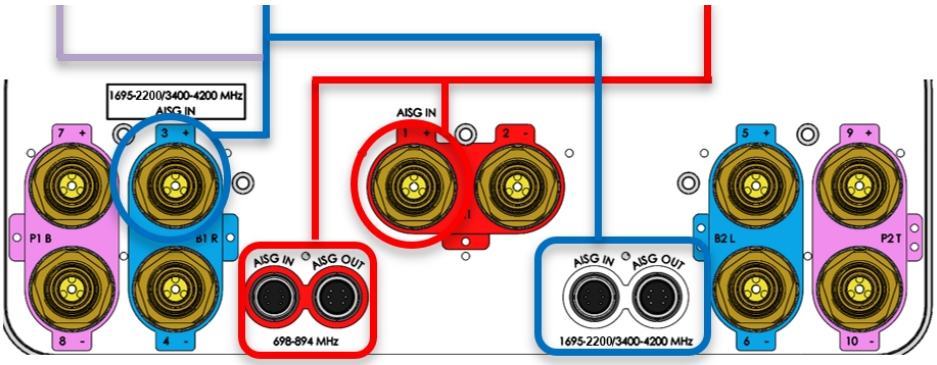

Note: The RET Device for 3400-4200 MHz is connected via the 1695-2200 Port 3 Bias T port or 1695-2200/3400-4200 MHz AISG ports.

Array topology

5 sets of radiating arrays

R1: 698-894 MHz
B1: 1695-2200 MHz
B2: 1695-2200 MHz
P1: 3400-4200 MHz
P2: 3400-4200 MHz

Band	RF port
698-894	1-2
1695-2200	3-4
1695-2200	5-6
3400-4200	7-8
3400-4200	9-10

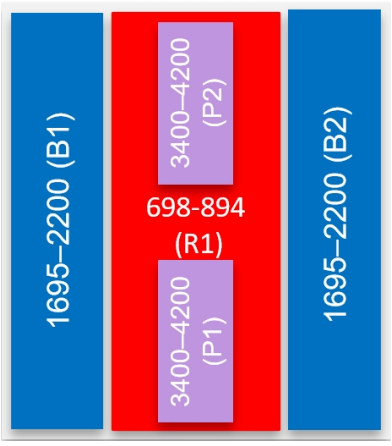

©2024 JMA Wireless. All rights reserved. This document contains proprietary information. All products, company names, brands, and logos are trademarks™ or registered® trademarks of their respective holders. All specifications are subject to change without notice. +1 315.431.7100 customerservice@jmawireless.com