CX08OMI236-3C

NWAV™ X-Pol OMNI Cantenna

Octo-port 2 ft 360° cantenna with RET-controlled HB:

4 ports 698-960 MHz and 4 ports 1695-2690 MHz

- X-Pol, Small Cell, octo-port antenna
- Suitable for pole or building mount
- 4x4 MIMO low-band and 4x4 MIMO high-band
- Internal beam combining
- Dependent RET control for HB ports
- Suitable for LTE/UMTS/CDMA/GSM technologies
- Cost-effective solution for neutral host locations

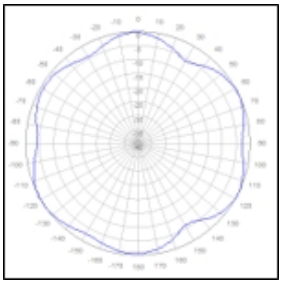

Omni clover

Electrical specification (minimum/maximum)	Ports 1, 2, 3, 4		Ports 5, 6, 7, 8				
Frequency bands, MHz	698-798	824-960	1695-1880	1850-1990	1920-2180	2300-2500	2500-2690
Polarization	± 45°		± 45°				
Average gain over all tilts, dBi	3.5	3.5	9.4	9.7	9.9	10.1	10.2
Horizontal beamwidth (HBW), degrees	360°		360°				
Vertical beamwidth (VBW), degrees[1]	73°	70°	15.7°	15.1°	14.6°	14.6°	12.2°
Electrical downtilt (EDT) range, degrees	0° (FET)		2-8° (RET)				
Cross-polar isolation, port-to-port, dB[1]	25	25	25	25	25	25	25
Max VSWR / return loss, dB	1.5:1 / -14.0		1.5:1 / -14.0				
Max passive intermodulation (PIM), 2x20W carrier, dBc	-153		-153				
Maximum input power per port, watts	250		150				
Maximum total input power, watts	900						

[1] Typical value over frequency and tilt

Ordering information	
Antenna model	**Description**
CX08OMI236-3C	2F X-Pol OCTO OMNI 360° LB 0° FET, 1695-2690 MHz 2-8° RET, 4.3-10
Optional accessories	
AISG cables	M/F cables for AISG connections
PCU-1000 RET controller	Stand-alone controller for RET control and configurations

©2024 JMA Wireless. All rights reserved. This document contains proprietary information. All products, company names, brands, and logos are trademarks™ or registered® trademarks of their respective holders. All specifications are subject to change without notice. +1 315.431.7100 customerservice@jmawireless.com

CX08OMI236-3C

NWAV™ X-Pol OMNI Cantenna

Mechanical specifications	
Dimensions height/diameter, inches (mm)	29.4/ 14 (746.8/ 355)
Antenna volume (cubic feet)	2.44
No. of RF input ports, connector type, and location	8 x 4.3-10 female, bottom
RF connector torque	96 lbf·in (10.85 N·m or 8 lbf·ft)
Net antenna weight, lb (kg)	38.6 (17.5)
Rated wind survival speed, mph (km/h)	150 (241)
Frontal wind loading @ 160 km/h, lbf (N)	47.6 (211.5)
Equivalent flat plate @ 100 mph and Cd=2, sq ft	0.96

Front view

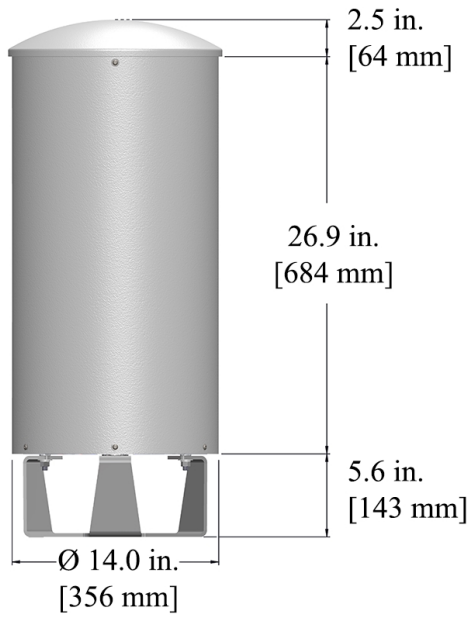

End view

The 0 degree reference arrow corresponds to the 0 degree position in the antenna pattern file. Each antenna pattern file uses a top down orientation view (the patterns are viewed from the top of the antenna looking down).

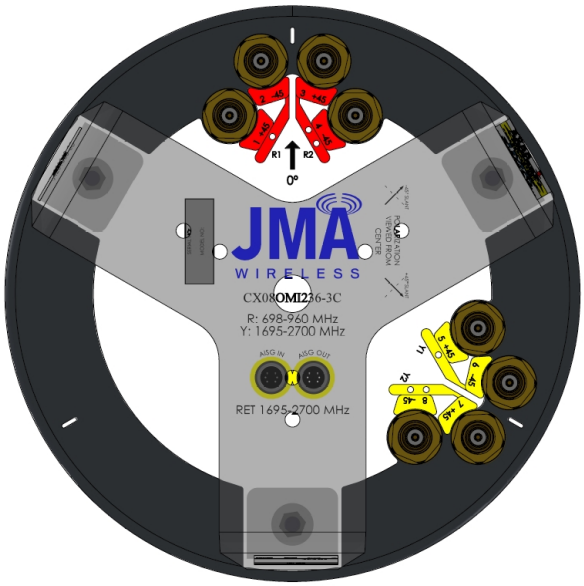

Notes on cylinder brackets

- All CX* antennas come with the bottom mount bracket (marked as **A**) factory-installed (all factory testing is done with bracket attached)
- Hardware is included with each antenna to connect bottom bracket to different mounting systems.
- JMA cylinder brackets are compatible with bottom mount via universal cantenna mount sleeve (marked as **B**), sold separately.
- To mitigate potential risk of PIM issues, the recommended torque values need to be applied.

Mounting details

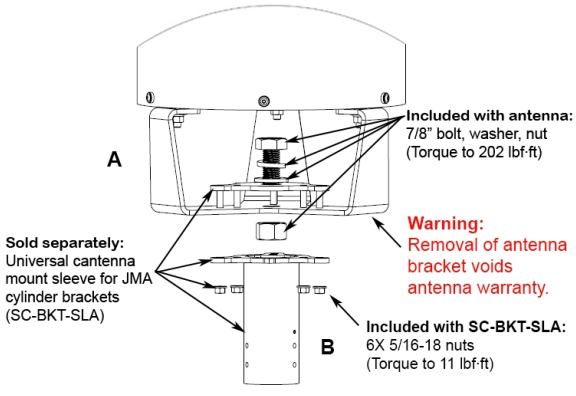

Small Cell solutions and mounting systems (sold separately)			
Side Arm Mounting System	SC-BKT-SA-(color)	Wide Diameter Pole	SC-BKT-WTPE-(color)
Steel Pole Mounting System	SC-BKT-SLA (color)		

©2024 JMA Wireless. All rights reserved. This document contains proprietary information. All products, company names, brands, and logos are trademarks™ or registered® trademarks of their respective holders. All specifications are subject to change without notice. +1 315.431.7100 customerservice@jmawireless.com

Remote electrical tilt (RET 1000) information	
RET location	Integrated into antenna
RET interface connector type	8-pin AISG connector per IEC 60130-9
RET connector torque	Min 0.5 N·m to max 1.0 N·m (hand pressure & finger tight)
RET interface connector quantity	2 pairs of AISG male/female connectors
RET interface connector location	Bottom of the antenna
Total no. of internal RETs high bands	1
RET input operating voltage, vdc	10-30
RET max power consumption, idle state, W	≤ 2.0
RET max power consumption, normal operating conditions, W	≤ 13.0
RET communication protocol	AISG 2.0 / 3GPP

RET topology

A single RET device controls all 3 sectors via the designated external AISG connector as shown below:

RET device	Band	RF port
1	1695-2690	5-8

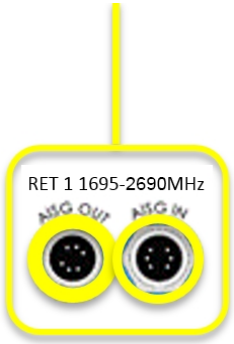

Array topology

4 sets of radiating arrays

R1: 698-960 MHz
R2: 698-960 MHz
Y1: 1695-2690 MHz
Y2: 1695-2690 MHz

Band	RF port
1695-2690	5-6
698-960	1-2
698-960	3-4
1695-2690	7-8

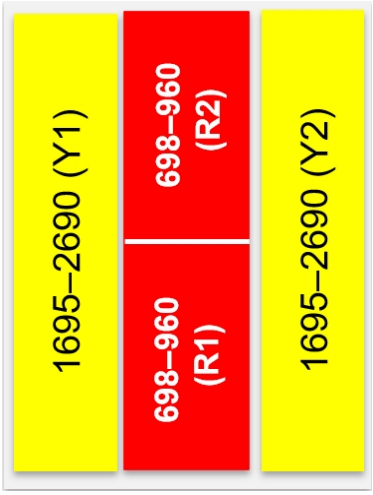

©2024 JMA Wireless. All rights reserved. This document contains proprietary information. All products, company names, brands, and logos are trademarks™ or registered® trademarks of their respective holders. All specifications are subject to change without notice. +1 315.431.7100 customerservice@jmawireless.com